DOOR PARTS

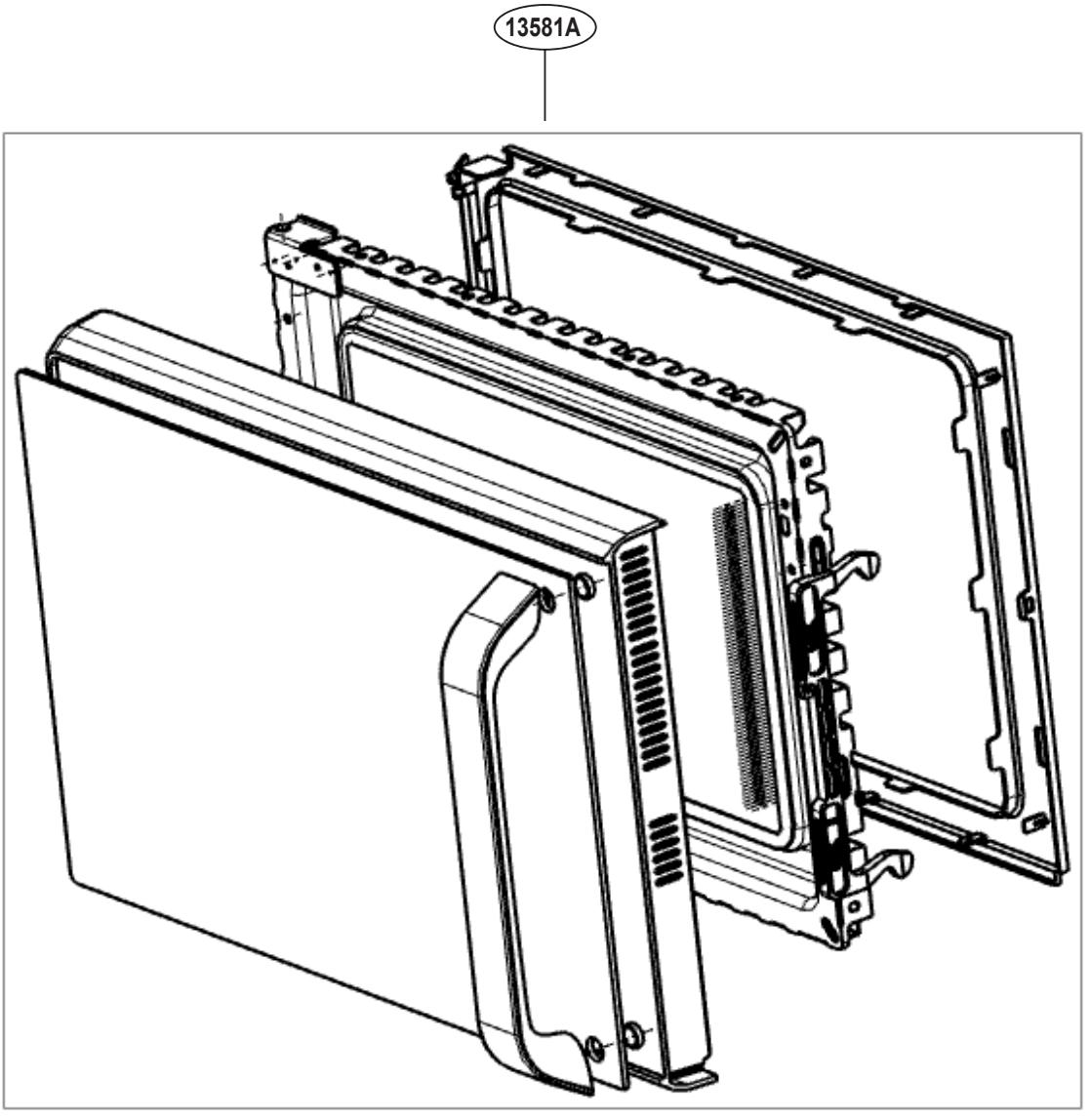

CONTROL PANEL PARTS

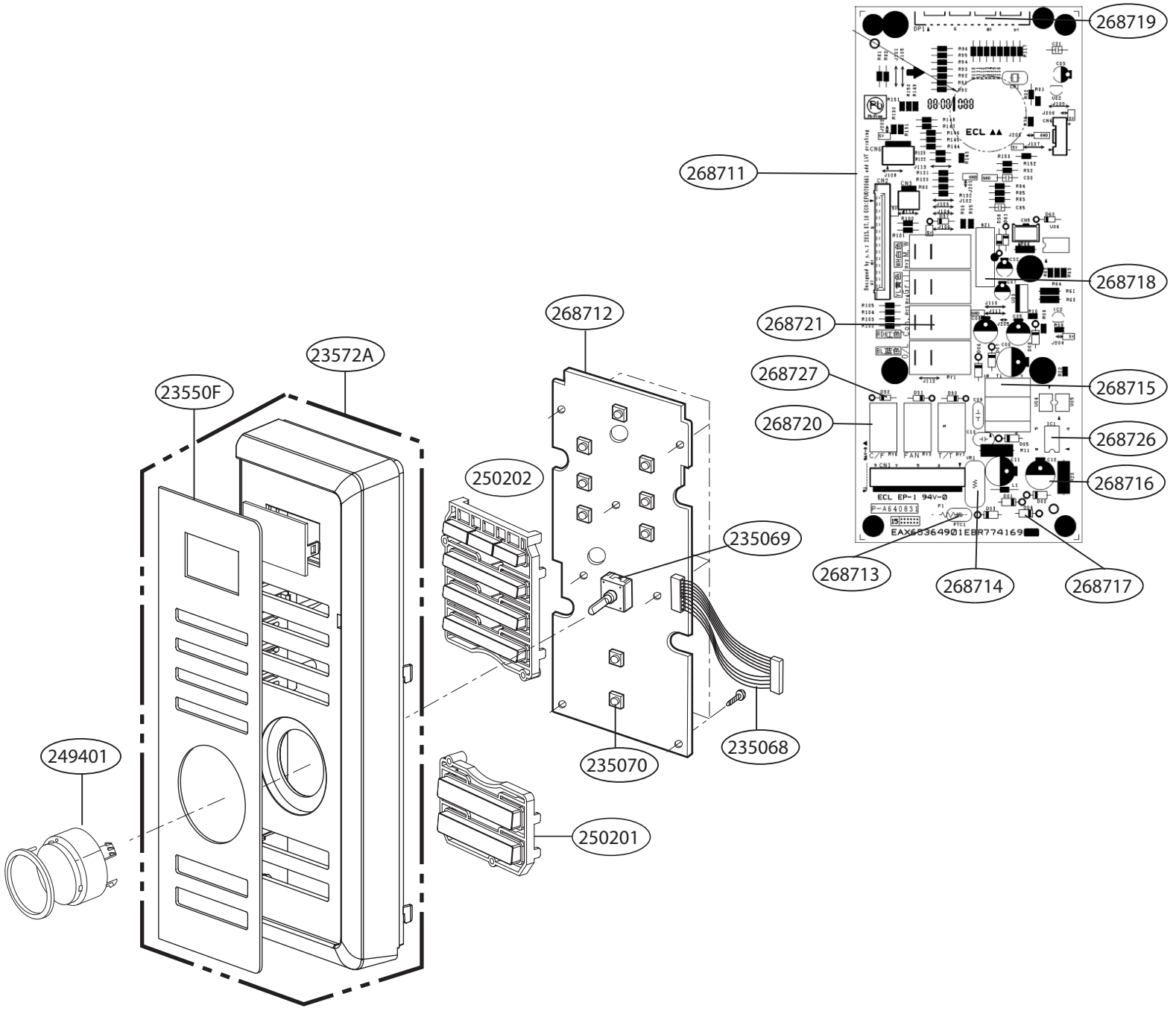

OVEN CAVITY PARTS

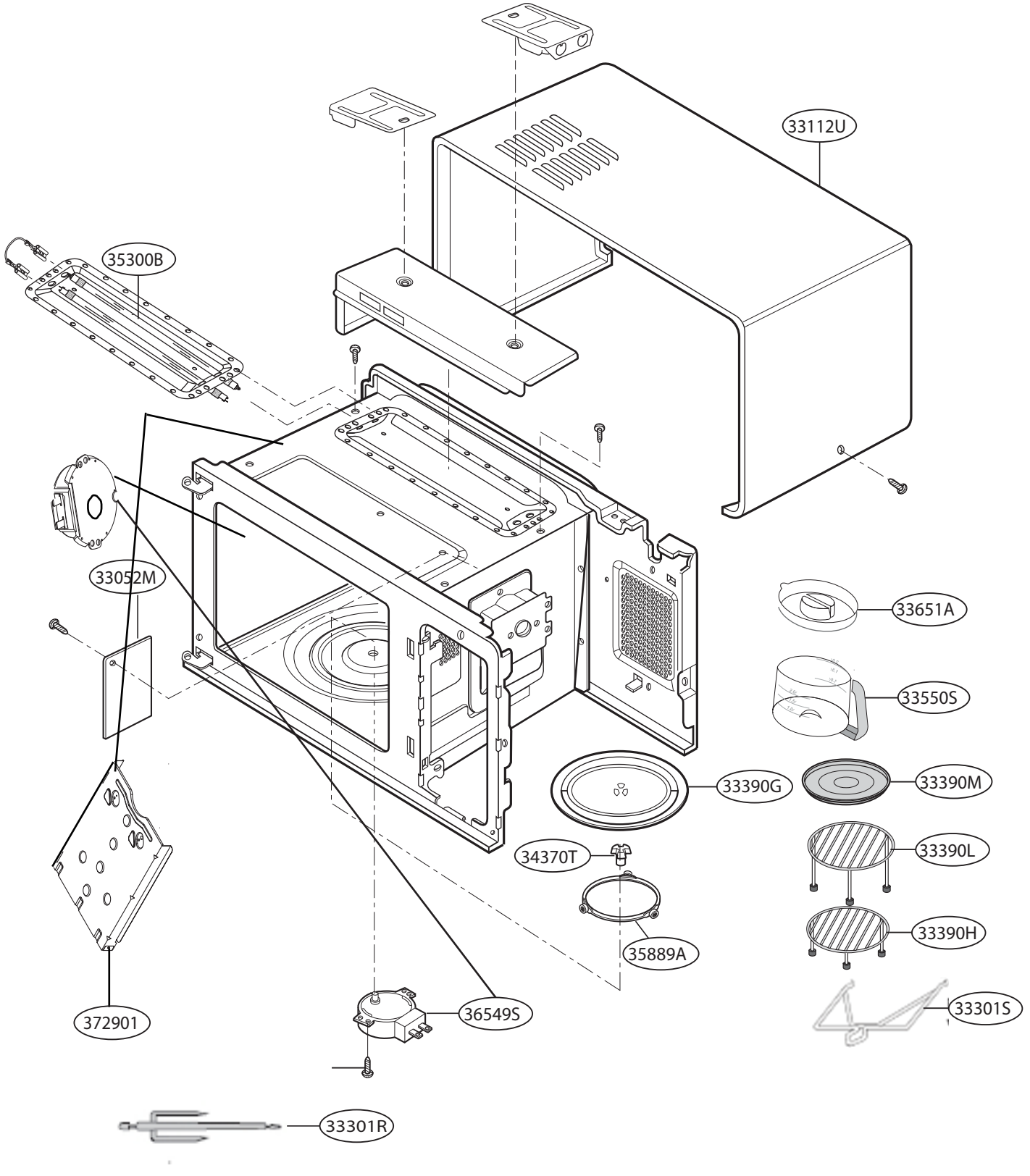

LATCH BOARD PARTS

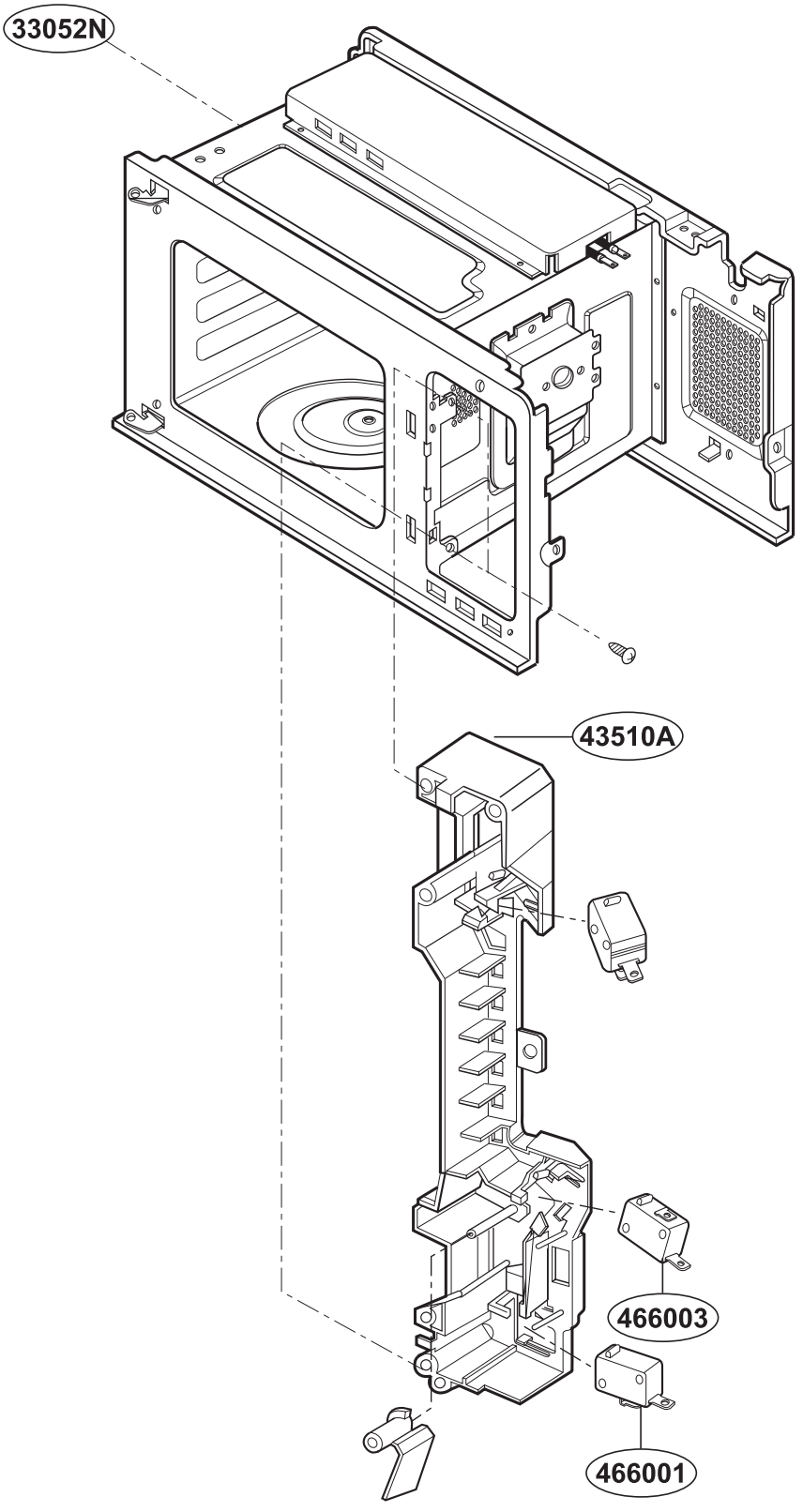

INTERIOR PARTS

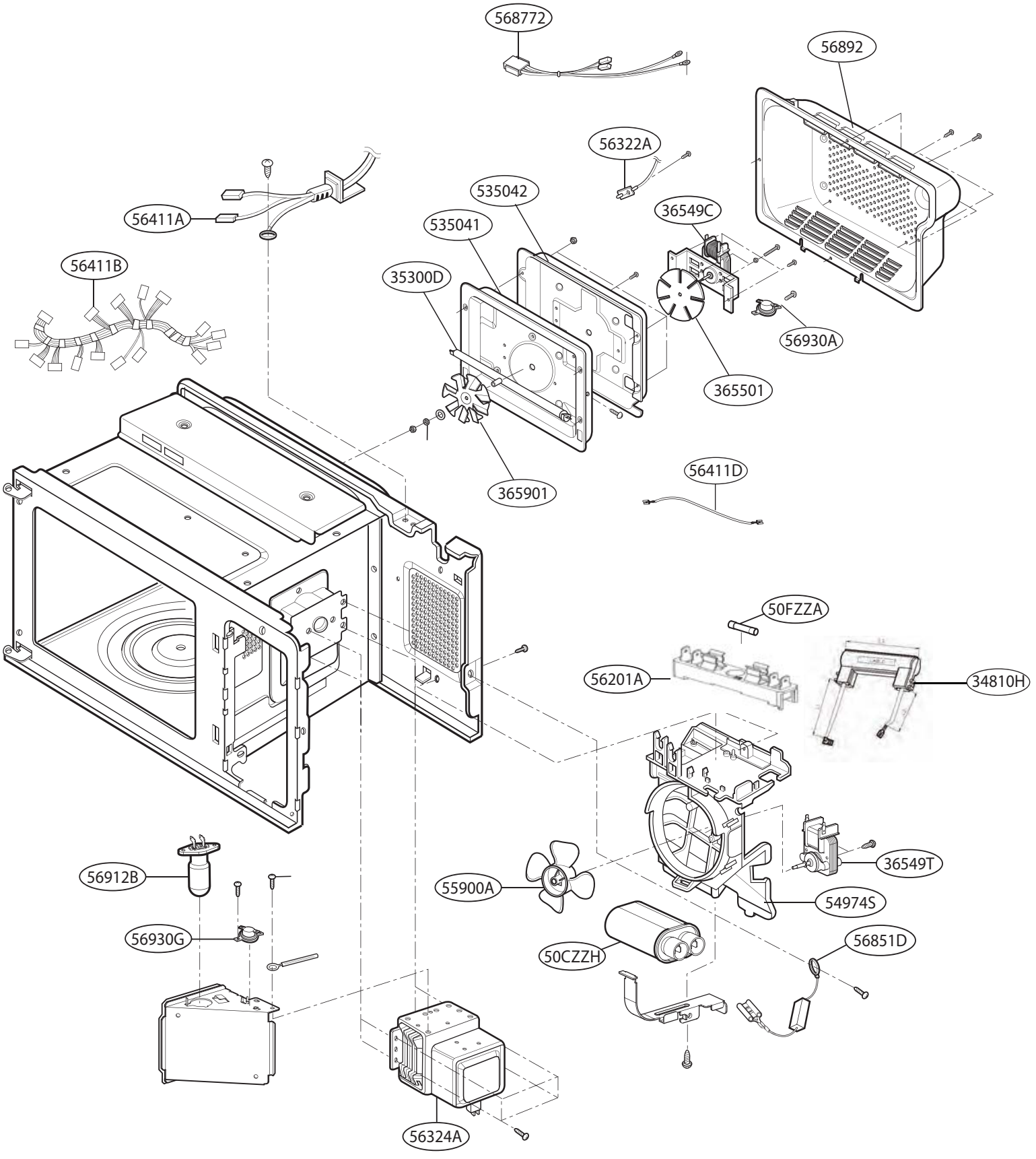
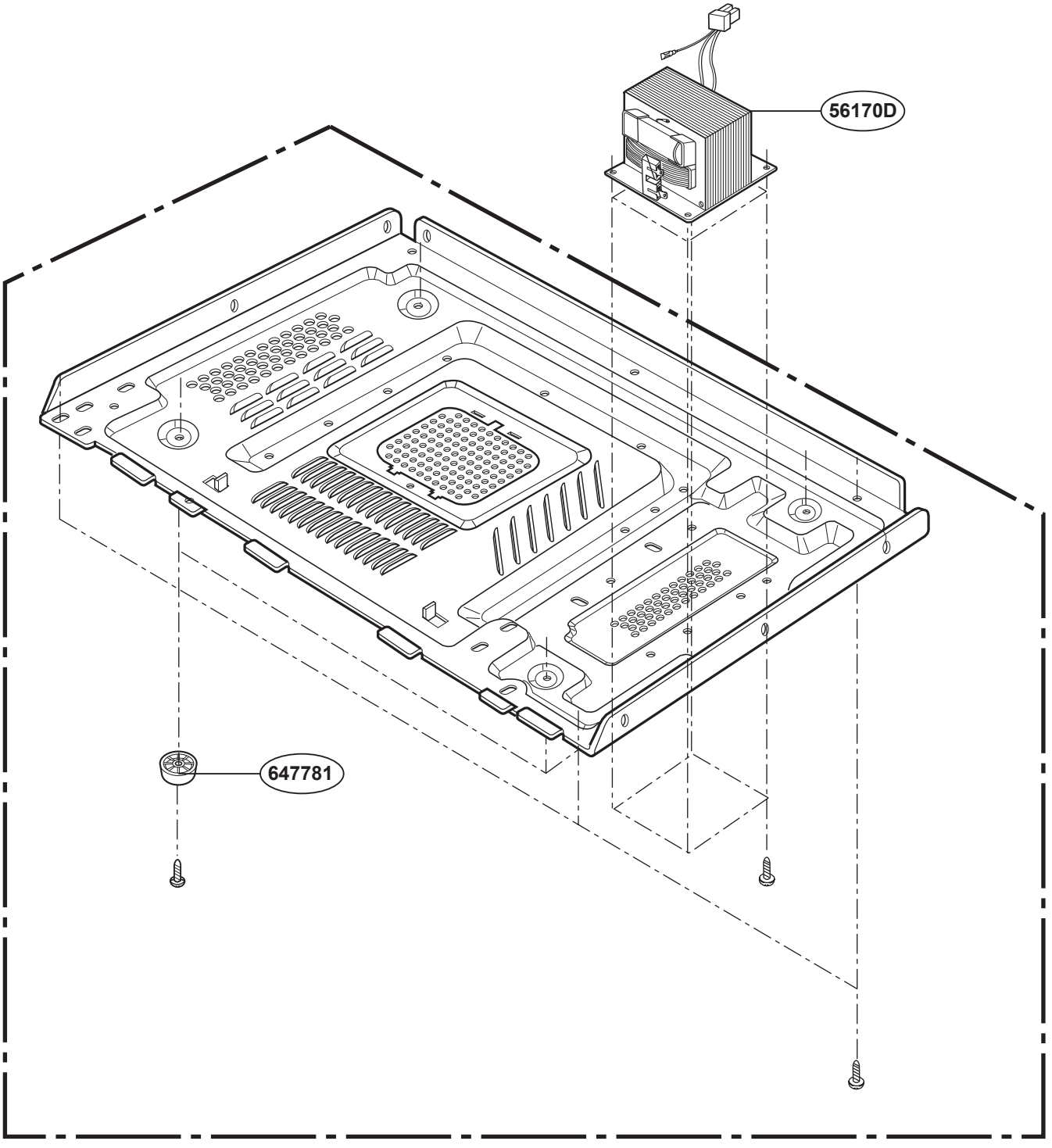
BASE PLATE PARTS